THIS SCHEMATIC IS FURNISHED ONLY FOR TEST AND MAINTENANCE PURPOSES. THE CIRCUITS ARE PROPRIETARY IN NATURE AND SHOULD BE TREATED ACCORDINGLY.
COPYRIGHT 1966 BY DIGITAL EQUIPMENT CORPORATION

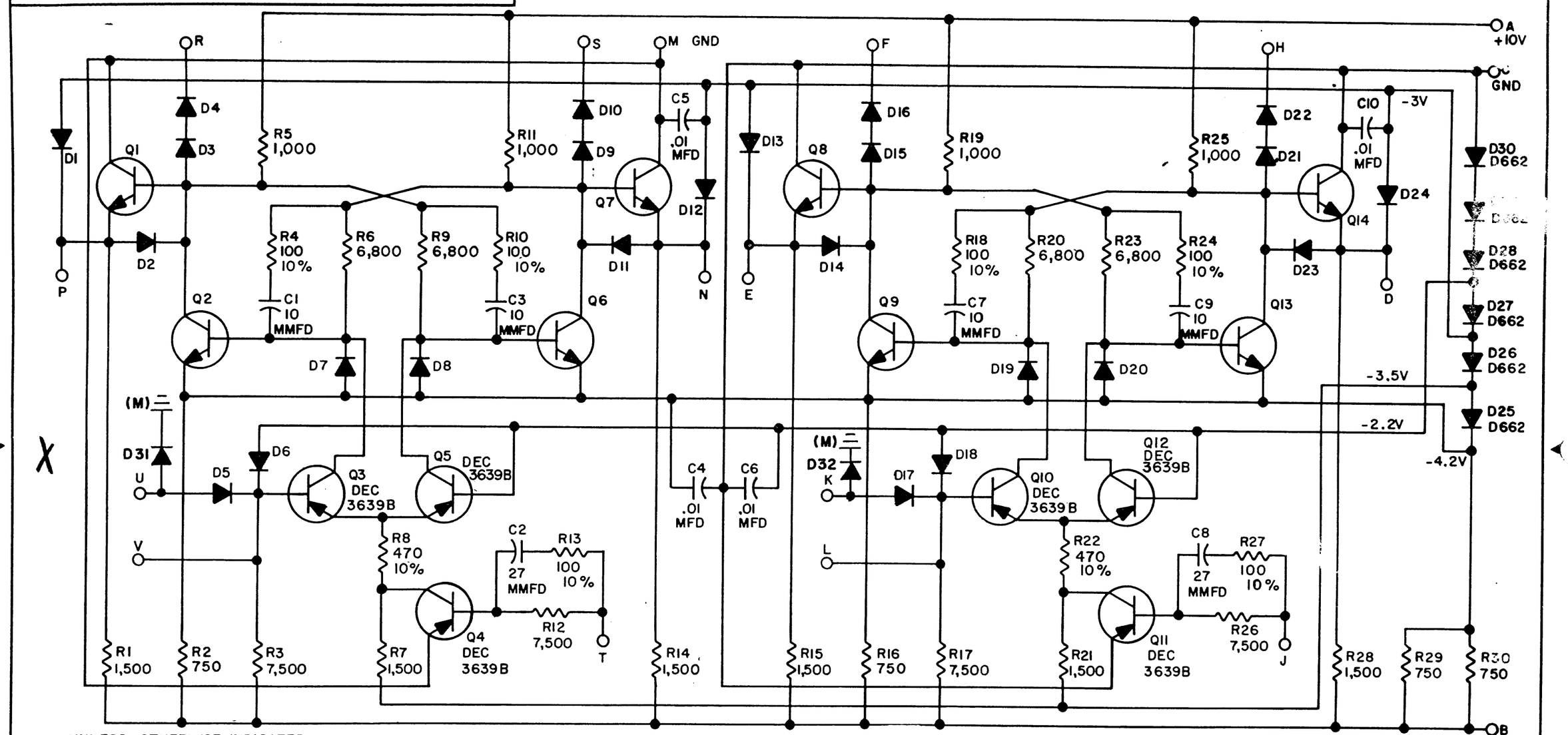

UNLESS OTHERWISE INDICATED;
RESISTORS ARE 1/4W; 5%
DIODES ARE D664.
TRANSISTORS ARE DEC3009B

REVISIONS		
REV.	CHG NO.	CHK
A	5453	REV. & REDR.
B	5825	
C	6187	
D	6488	
E		
F	6564	

DRN.	A. OUELLETTE	DATE 2-7-66
CHK'D	R. SILVERMAN	DATE 2-10-66
ENG.	R. SOGGE	DATE 2-9-66
PROD.		DATE

TRANSISTOR & DIODE CONVERSION CHART

DEC	EIA	DEC	EIA
DEC3009B	2N3009		
DEC3639B	2N3639		
D662	1N645		
D664	1N3606		

digital EQUIPMENT CORPORATION
MAYNARD, MASSACHUSETTS

TITLE
JAM FLIP-FLOP B213

SIZE	CODE	NUMBER	REV.
B	CS	B213-0-1	F

PRINTED CIRCUIT REV. C

DEC FORM NO.
DRB 102

SIZE B | CODE CS | NUMBER B213-0-1 | REV. F