THIS SCHEMATIC IS FURNISHED ONLY FOR TEST AND MAINTENANCE PURPOSES. THE CIRCUITS ARE PROPRIETARY IN NATURE AND SHOULD BE TREATED ACCORDINGLY
COPYRIGHT 1971 BY DIGITAL EQUIPMENT CORPORATION

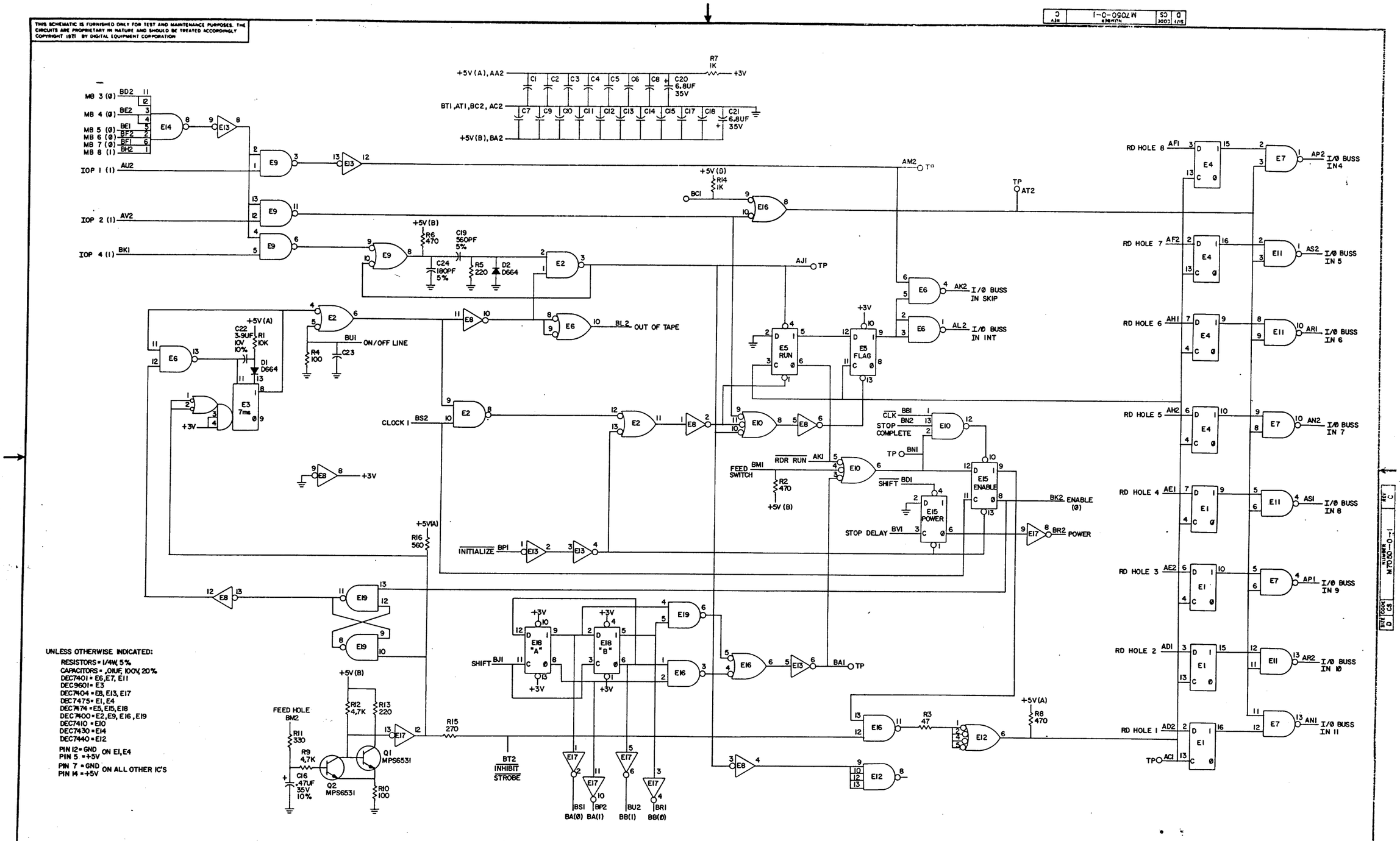

UNLESS OTHERWISE INDICATED:

RESISTORS = 1/4W, 5%
CAPACITORS = .01UF, 100V, 20%
DEC7401 = E6, E7, E11
DEC9601 = E3
DEC7404 = E8, E13, E17
DEC7475 = E1, E4
DEC7474 = E5, E15, E18
DEC7400 = E2, E9, E16, E19
DEC7410 = E10
DEC7430 = E14
DEC7440 = E12
PIN 12 = GND, PIN 5 = +5V ON E1, E4
PIN 7 = GND, PIN 14 = +5V ON ALL OTHER IC'S

REVISIONS		
CHK	CHG NO.	REV
	30001	C

DRN NANCY MOORE DATE 2/2/71
CHKD DATE 2-24-71
ENG DATE
PROD DATE

TRANSISTOR & DIODE CONVERSION CHART

DEC	EIA	DEC	EIA
MPS6531	MPS6531	D664	1N3606

digital EQUIPMENT CORPORATION
MAYNARD, MASSACHUSETTS

TITLE READER CONTROL

SIZE	CODE	NUMBER	REV
D	CS	M7050-0-1	C

PRINTED CIRCUIT REV. D

DEC FORM NO.